Distributor: Westnet Distribution Single Member S.A.

Authorized distributor appointed by the brand's licensee.

PRODUCT DATASHEET

LED FLOODLIGHT 180D BRACKET 50W

PRODUCT DATASHEET

LED FLOODLIGHT 180D BRACKET 50W



TOSHIBA

1. TECHNICAL DATA

A. GENERAL DATA

MODEL	**FL 180D** 3000K	**FL 180D** 4000K	**FL 180D** 5000K	**FL 180D** 6500K
P/N (Black shell)	DELL-FL34050C5A011	DELL-FL44050C5A011	DELL-FL54050C5A011	DELL-FLC4050C5A011
P/N (White shell)	DELL-FL34050C5A021	DELL-FL44050C5A021	DELL-FL54050C5A021	DELL-FLC4050C5A021
Westnet code (Black shell)	00172843	00172842	00172841	00172840
Westnet code (Black shell)	00173315	00173314	00173313	00173312
EAN code on pack (Black shell)	4711112386161	4711112384013	4711112385515	4711112386154
EAN code on pack (White shell)	4711112388691	4711112388684	4711112388677	4711112388660
EAN code on inner box	N/A			
ITF code on inner box	N/A			
ITF code on outer box (Black shell)	14711112386168	14711112384010	14711112385512	14711112386151
ITF code on outer box (White shell)	14711112388698	14711112388681	14711112388674	14711112388667

B. ELECTRICAL DATA

Rated Voltage	230V AC
Frequency	50 Hz
Rated Wattage	50W
Deviation Tolerance of Wattage	±10 %
Rated Current	0.213 A
Maximum Input Current	0.245 A
Power factor λ	>0.9
Displacement factor (cos φ1)	>0.9
Protection class	Class I
Operating mode	Integrated LED driver
Start On	<0.5S
Warm up time	<1S

C. PHOTOMETRICAL DATA

COLOR	Warm White	Neutral White	Daylight White	Cool White
Color Temperature (CCT)	3000K	4000K	5000K	6500K
Total luminous flux (lm)	4500 lm			
Luminous efficacy	90 lm/W			
Useful luminous flux Φuse (lm)*1	4050 lm			
Total Mains Efficacy ηTM*2	95.26 lm/W			
Peak luminous intensity (cd)	1810			
Colour Rendering Index*3	≧80			
R9 CRI*3	>1			
Directional lamp	Yes			
Beam Angle	120°			
Beam angle correspondence*4	Wide cone			
Energy Efficiency Class(EEC)	F			
Stroboscopic effect metric (SVM) *5	No Claimed			
Flicker metric (PstLM) *5	No Claimed			
Color Consistency*6	6 Step MacAdam Ellipse (6 SDCM)			
Photobiological safety group acc. to EN62778	RG0			

*1 Useful luminous flux Φuse (lm): The determined value shall not be less than the declared value minus 10%.

*2 Total Mains Efficacy ηTM = (Φuse / Pon) x FTM (lm/W).

*3 The determined value shall not be less than the declared value by more than 2,0 units.

*4 Beam angle correspondence: Non-directional: Sphere or Directional: Wide cone and Narrow cone.

Wide cone: Bean angle ≧ 90°(Φ120°, in a 120°cone) 、Narrow cone: Bean angle ＜ 90°(Φ90°, in a 90°cone)

*5 In accordance with (EU)2019/2020 of SVM ≤ 0,4 at full-load (except for HID with Φuse > 4 klm and for light sources intended for use in outdoor applications, industrial applications or other applications where lighting standards allow a CRI< 80)

*6 3000K center point (0.43387, 0.40319), 4000K center point (0.38177, 0.37959), 5000K center point (0.34464, 0.35506) 6500K center point (0.31230, 0.32825).

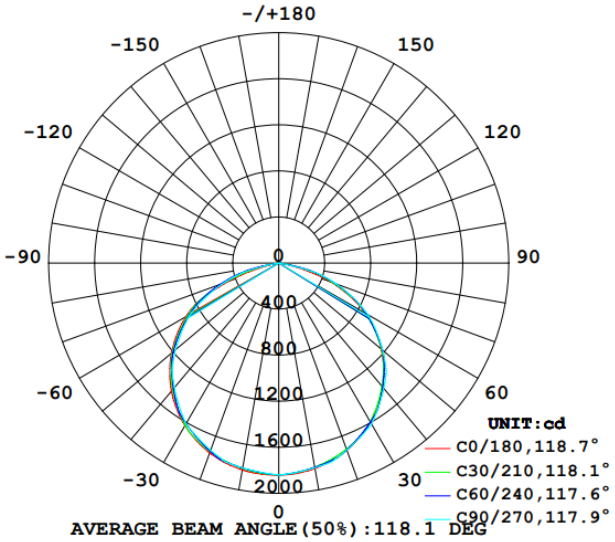

D. GEOMETRIC DATA

Maximum Length	195.6 ± 2 mm
Maximum Width	214.8 ± 2 mm
Maximum Thickness	23.5 ± 2 mm
Mass	670 g ± 10%

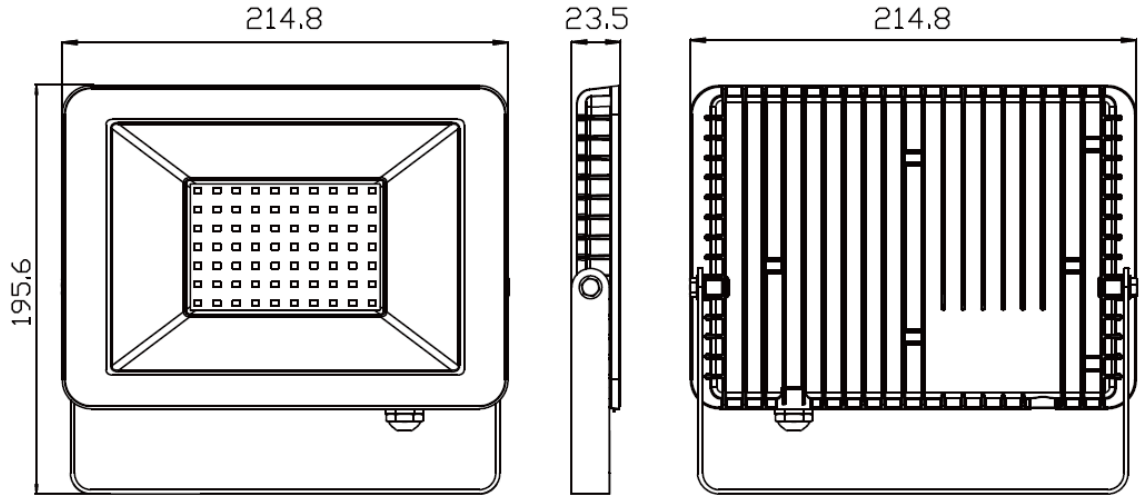

E. MATERIALS & Colors

Product color	Black / White
Housing color	Black / White
Body material	Die-cast aluminum alloy
Cover material	Glass

F. APPLICATION & MOUNTING

Ambient temperature range	-20 °C ~ 40 °C
Temperature range at storage	-30 °C ~ 70 °C
Type of connection	Cable, 3-Pole
Type of protection	IP65
Protection class IK (shock resistance)	N/A
Dimmable	Non-dim
Type of dimming	N/A
Mounting type	Surface
Mounting location	Wall / Ceiling / Floor
Application environment	Outdoor
Adjustable	Bracket rotates 180°
LED module replaceable	Not replaceable
With light source	Yes

G. LIFESPAN

(Supplied Voltage:AC230V; Ambient Temperature: 25ºC)

Survival factor	90%
Lumen Maintenance Factor	96%
Lifespan L70/B50 at 25 °C	15,000 h

H. ENVIRONMENTAL RELEVANT MATERIALS

Mercury (Hg)	Comply with RoHS Directive 2011/65/EU
Lead (Pb)	
Cadmium (Cd)	
Hexavalent Chromium (Cr6+)	
Polybrominated Biphenyls (PBBs)	
Polybrominated Diphenyl Ethers (PBDEs)	
Bis (2-ethylhexyl) phthalate (DEHP)	
Butyl benzyl phthalate (BBP)	
Dibutyl phthalate (DBP)	
Diisobutylphthalate (DIBP)	

2. WARNINGS

- Before replacing, turn off power and let lamp cool to avoid electrical shock or burn.
- Do not touch electronic components, electronic components maybe under high voltage.
- Do not stare into LED light beam.
- The luminaire shall be installed by a qualified electrician and wired in accordance with the latest IEE electrical regulations or the national requirements.

3. CAUTIONS

Only to apply in dry and most of open fixtures with lamp-holders that offer sufficient space (10 mm free air space). Not intended for use with emergency light fixtures for exit lights.

4. NOTES

All characteristics are estimated at room temperature (25°C), free air burning, base up burning position and at rated voltage. In view of the complex manufacturing process for light above for the technical LED parameters are merely statistical values that do not necessarily correspond to the actual technic individual products may vary from the typical values.

5. LOGISTIC INFORMATION

MODEL	FL 180D 3000K	FL 180D 4000K	FL 180D 5000K	FL 180D 6500K
Pieces per pack	1	1	1	1
Size of pack	224x27x194mm	224x27x194mm	224x27x194mm	224x27x194mm
Weight per pack (G.W)	0.73kg ± 5%	0.73kg ± 5%	0.73kg ± 5%	0.73kg ± 5%
Packs per inner box	N/A	N/A	N/A	N/A
Size of inner box	N/A	N/A	N/A	N/A
Weight per inner box (G.W)	N/A	N/A	N/A	N/A
Packs per outer box	16	16	16	16
Size of outer box	245x238x408mm	245x238x408mm	245x238x408mm	245x238x408mm
Weight per outer box (G.W)	12.3Kg ± 5%	12.3Kg ± 5%	12.3Kg ± 5%	12.3Kg ± 5%

6. CONFORMITY

2014/35/EU; Low Voltage Directive	EN 60598-2-5: 2015 ; EN IEC 60598-1: 2021 ; IEC/TR 62778:2014 ; EN 62493:2015 ; EN IEC 62031:2020
2014/30/EU; EMC Directive	EN IEC 55015: 2019+A11:2020 、 EN IEC 61000-3-2:2019+A1:2021 、 EN 61000-3-3: 2013+A2:2021 、 EN 61547: 2009
2009/125/EC; (EU)2017/1369 ErP Directive	(EU) 2019/2015、(EU) 2019/2020、(EU) 2021/340、(EU) 2021/341
2011/65/EU+(EU)2015/863+ (EU)2020/659 RoHS Directive	EN 50581: 2012

7. ACCESSORIES

N/A

8. APPLICABLE COUNTRIES

Albania, Austria, Belgium, Bulgaria, Croatia, Cyprus, Czech Republic, Denmark, Estonia, Finland, France, Georgia, Germany, Greece, Iceland, Ireland, Italy, Luxembourg, Malta, Netherlands, Norway, Portugal, Romania, Serbia, Spain, Sweden, Switzerland, United Kingdom, Hungary, Poland, Slovakia, Latvia, Lithuania, Bosnia Herzegovina, North Macedonia, Montenegro, Turkey.

Note: The requirement of each country will be reflected to the product specifications, when the products will be shipped to such country.

9. MANUFACTURER AND BRAND LICENSE

EPILEDS TECHNOLOGIES, INC.

Authorized Licensee for TOSHIBA trademark